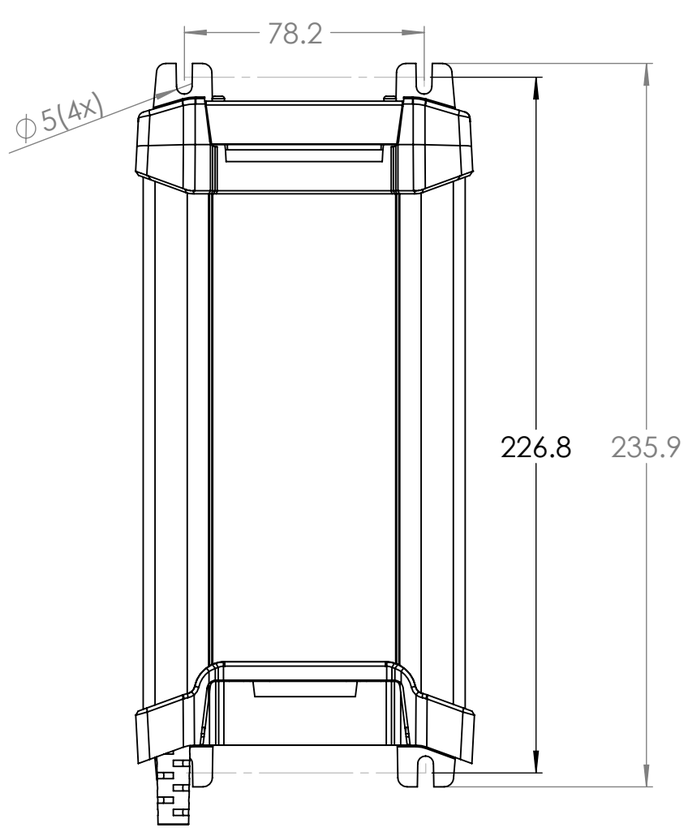

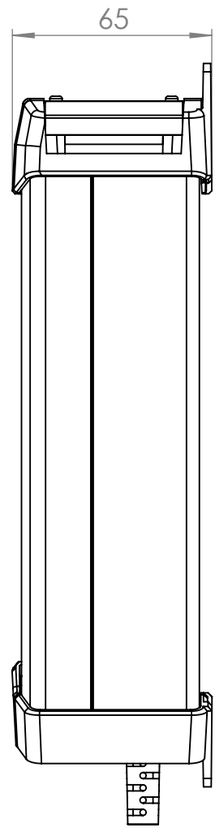

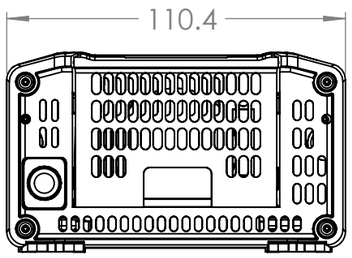

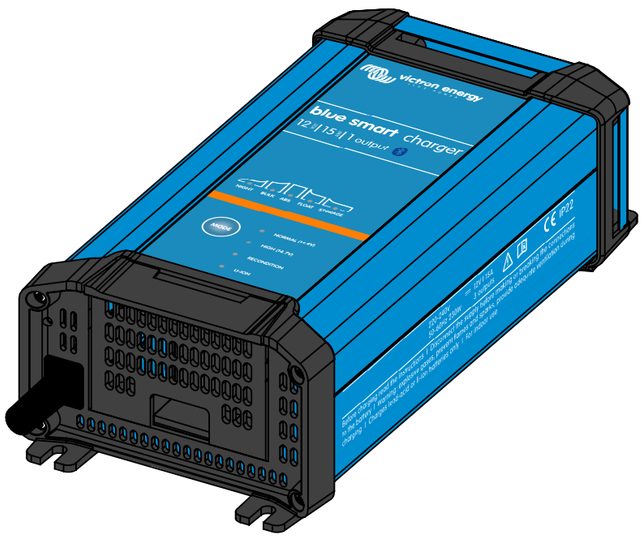

Dimension Drawing - Blue Smart IP22	
BPC121542002	Blue Smart IP22 Charger 12/15(1) 230V CEE 7/7
BPC121542012	Blue Smart IP22 Charger 12/15(1) 230V AU/NZ
BPC121542022	Blue Smart IP22 Charger 12/15(1) 230V UK
BPC121544002	Blue Smart IP22 Charger 12/15(3) 230V CEE 7/7
BPC121544012	Blue Smart IP22 Charger 12/15(3) 230V AU/NZ
BPC121544022	Blue Smart IP22 Charger 12/15(3) 230V UK
BPC122042002	Blue Smart IP22 Charger 12/20(1) 230V CEE 7/7
BPC122042012	Blue Smart IP22 Charger 12/20(1) 230V AU/NZ
BPC122042022	Blue Smart IP22 Charger 12/20(1) 230V UK
BPC122043022	Blue Smart IP22 Charger 12/20(3) 230V UK
BPC122044002	Blue Smart IP22 Charger 12/20(3) 230V CEE 7/7
BPC122044012	Blue Smart IP22 Charger 12/20(3) 230V AU/NZ
BPC123047002	Blue Smart IP22 Charger 12/30(1) 230V CEE 7/7
BPC123047012	Blue Smart IP22 Charger 12/30(1) 230V AU/NZ
BPC123047022	Blue Smart IP22 Charger 12/30(1) 230V UK
BPC123048002	Blue Smart IP22 Charger 12/30(3) 230V CEE 7/7
BPC123048012	Blue Smart IP22 Charger 12/30(3) 230V AU/NZ
BPC123048022	Blue Smart IP22 Charger 12/30(3) 230V UK
BPC240842002	Blue Smart IP22 Charger 12/30(3) 230V UK
BPC240842002	Blue Smart IP22 Charger 24/8(1) 230V CEE 7/7
BPC241242002	Blue Smart IP22 Charger 24/12(1) 230V CEE 7/7
BPC241242012	Blue Smart IP22 Charger 24/12(1) 230V AU/NZ
BPC241242022	Blue Smart IP22 Charger 24/12(1) 230V UK
BPC241647002	Blue Smart IP22 Charger 24/16(1) 230V CEE 7/7
BPC241647012	Blue Smart IP22 Charger 24/16(1) 230V AU/NZ
BPC241647022	Blue Smart IP22 Charger 24/16(1) 230V UK
BPC241648002	Blue Smart IP22 Charger 24/16(3) 230V CEE 7/7
BPC241648012	Blue Smart IP22 Charger 24/16(3) 230V AU/NZ
BPC241648022	Blue Smart IP22 Charger 24/16(3) 230V UK

Dimensions in mm

victron energy
BLUE POWER

Rev02